LAKE COUNTY ZONING NOTICE #VAR-000356-2018

LAKE VILLA TOWNSHIP

The Lake County Zoning Board of Appeals has scheduled a public hearing on Thursday, May 24, 2018 at 9:00 A.M. at the Lake County Central Permit Facility, 500 W. Winchester Road, Libertyville, Illinois, on the petition of the Lake County Public Works Department, record owner, who seek the following variance from the requirements of the Lake County Code and any other zoning relief as required:

1. Reduce the minimum west street yard setback from 30 feet to 22.5 feet to accommodate the installation of a generator.

Please note that quantitative values may be subject to minor alterations due to surveyed conditions.

The subject property is located at 25346 W. Lincoln Dr., Lake Villa, IL 60046 and is approximately 0.40 acres.

PIN 05-01-413-015

This application is available for public examination at the office of the Lake County Zoning Board of Appeals, 500 W. Winchester Rd, Libertyville, Illinois, attn.: Hannah Mulroy, Project Manager (847) 377-2187.

George Bell
Chairman

LAKE COUNTY ZONING BOARD OF APPEALS

VARIATION APPLICATION

Applicant(s):
(please print)

Lake County Public Works Department — Phone: 847-377-7500
Owner(s)

650 W. Winchester Road — Fax: 847-377-7173
Libertyville, IL 60048 — Email: hgalan@lakecountyil.gov
Address

_____ — Phone: _____
Contract purchaser(s) if any

_____ — Fax: _____
_____

Email: _____
_____

_____
Address

I/we hereby authorize the following person to represent me/us in all matters related to this application:

Heather Galan — Phone: 8473777141
Name — Cell: _____

_____ — Fax: _____
_____ — Email: _____
_____
Address

Subject Property:

Present Zoning: R-3 Zoning District Conforming Lot
Present Use: Water Delivery and Treatment Facilities
Proposed Use: same
PIN(s): 05-01-413-015
Address: 25346 Lincoln Drive, Lake Villa IL

Legal description:
(X see deed)

Request: The following variation(s) are requested:

1. From 30 foot to 22.5 foot front setback at Fox Lake Hills Site for generator installation
2. _____
3. _____

Explain why this variation(s) is necessary: To install generator for backup power supply

---

Approval Criteria: The Lake County Zoning Board of Appeals is required to make findings of fact on your request. You should "make your case" by explaining specifically how your proposed request relates to each of the following criteria:

1. Exceptional conditions peculiar to the applicant's property.
   Response:

The LCPWD is a public utility that runs a water delivery structure at this location which distributes drinking water to the surrounding community. In performing 24 hour continuous functions related to aforementioned water delivery a constant supply of electrical power is required to keep our control equipment running, the existing generator supplied back up power in the event of an area power outage but was located on the east side of the building. The new location chosen for the generator was picked to place it as far as possible away from neighboring homes. LCPWD is tasked with delivering water to the surrounding community on a property which is subject to residential zoning constraints due to surrounding use. The odd shape of the property along with how close the existing building is to the road, and having two road front set backs (corner lot) adds to the difficulty of meeting the standard 27' setback requirement.

2. Practical difficulties or particular hardship in carrying out the strict letter of the regulation.
   Response:

To comply with the 27′ setback requirement we would need to slide the proposed generator location east which would result in blocking access to a door on our building which is needed to access water treatment equipment. Another option to comply with the 27′ setback requirement would be to move the proposed new generator location north however this would result in a shortened distance from the neighbor to the north. A third option (Leaving the generator where it is currently) would not work since the neighbor to the East has complained about the generator in the past.

3. Harmony with the general purpose and intent of the zoning regulations.
   Response:

our intent is to maintain a further distance from the neighbors with the new proposed location for the generator to maintain harmony. The 27 foot setback requirement if met would result in a shortened distance to the neighbor to the north creating a less than ideal setback distance from the residence.

Note The 27′ setback requirement leaves two options, one is to comply with roadway setbacks which result in less than ideal distance to a home for sound buffering of generator noise.

The other option (Variance) is to allow the shortened distance to fall to the roadside allowing for a better final neighborhood installation of a public utility necessity. LCDPW would like to respectfully request to be granted the 22.5′ setback from the property line as depicted on the attached exhibit.

I/we hereby attest that all information given above is true and complete to the best of my/our knowledge.

Philip M. Perna

Signature(s) of owner(s)

Signature(s) of contract purchasers

I, Linda Seiler a Notary Public aforesaid, do hereby certify that Philip M. Perna

personally known to me is (are) the person(s) who executed the foregoing instrument bearing the date of April 10, 2018 and appeared before me this day in person and acknowledged that he/she/they signed, sealed and delivered the same instrument for the uses and purposes therein set forth.

Given under my hand and Notarial Seal this 10 day of April, 2018.

(Seal) My Commission expires 12/06/2021.

OFFICIAL SEAL
LINDA ROSE SEILER
Notary Public, State of Illinois
My Commission Expires 12/06/2021

 276399

7

GEO E COLE & CO CHICAGO LEGAL BLANKS

No. 801 (NEW MARCH 1957)

WARRANTY DEED—Statutory (ILLINOIS)

(CORPORATION TO CORPORATION)

Approved By {Chicago Title and Trust Co. {Chicago Real Estate Board

1362408

DOC. FILED FOR RECORD IN RECORDER'S OFFICE LAKE COUNTY, ILLINOIS

DEC 14 '67 2 1 17 PM

Frank J. Nustra

FRANK J. NUSTRA RECORDER

(The Above Space For Recorder's Use Only)

100.00

THE GRANTOR LAKE COUNTY WATER CORPORATION

a corporation created and existing under and by virtue of the laws of the State of Illinois and duly authorized to transact business in the State of Illinois, for and in consideration of Ten and no/100----------DOLLARS, and other good and valuable consideration----------

in hand paid, and pursuant to authority given by the Board of Directors of said corporation **CONVEYS and WARRANTS** unto County of Lake, a body politic

~~a corporation~~ organized and existing under and by virtue of the laws of the State of Illinois having its principal office in the City of Waukegan County of Lake and State of Illinois the following described Real Estate situated in the County of Lake and State of Illinois, to wit: Lot 20 in Block [illegible] in Fox Lake Hills, Oleanor Area, Unit No. 1, being a Subdivision in Section 31, Township 45 North, Range 9, East of the 3rd P.M., and of part of Section 1, Township 45 North, Range 9, East of the 3rd P.M., according to the plat thereof, recorded June 11, 1954 as Document 827521 in Book 32 of Plats, page 2, in Lake County, Illinois.

Lot 1 in Block 12 in Orchard Gardens of Fox Lake Hills, Unit No. 2, being a Subdivision of a part of Lot "B" in Fox Lake Hills, Russe Area, Unit No. 1, of a part of the South Half of Section 1, Township 45 North, Range 9, East of the 3rd P.M., according to the plat of said Orchard Gardens of Fox Lake Hills, Unit No. 2, recorded May 9, 1957 as Document 949910 in Book 34 of Plats, page 12, in Lake County, Illinois.

Subject to general taxes for the year 1967 and all subsequent years, and to covenants, conditions, restrictions and easements of record.

In Witness Whereof, said Grantor has caused its corporate seal to be hereto affixed, and has caused its name to be signed to these presents by its President, and attested by its Secretary, this 13th day of December, 19 67.

LAKE COUNTY WATER CORPORATION
(NAME OF CORPORATION)

IMPRESS CORPORATE SEAL HERE

BY John T. Rulo PRESIDENT

ATTEST: Dorothy H. Rulo SECRETARY

State of Illinois, County of Lake ss., I, the undersigned, a Notary Public, in and for the County and State aforesaid, **DO HEREBY CERTIFY, that** John T. Rulo personally known to me to be the President of the Lake County Water Corporation ~~corporation~~, and Dorothy H. Rulo personally known to me to be the Secretary of said corporation, and personally known to me to be the same persons whose names are subscribed to the foregoing instrument, appeared before me this day in person and severally acknowledged that as such President and Secretary, they signed and delivered the said instrument as President and Secretary of said corporation, and caused the corporate seal of said corporation to be affixed thereto, pursuant to authority, given by the Board of Directors of said corporation as their free and voluntary act, and as the free and voluntary act and deed of said corporation, for the uses and purposes therein set forth.

IMPRESS NOTARIAL SEAL HERE

Given under my hand and official seal, this 13th day of December 19 67

Commission expires September 30 19 71

Melva Kersey
NOTARY PUBLIC

AFFIX "RIDERS" OR REVENUE STAMPS HERE

DOCUMENT NUMBER

ADDRESS OF PROPERTY:

MAIL TO: NAME Dept. Public Works
ADDRESS 5th Floor - County Ad Building Waukegan, Illinois
CITY AND STATE Attn.: Warren Behr

THE ABOVE ADDRESS IS FOR STATISTICAL PURPOSES ONLY AND IS NOT A PART OF THIS DEED.

OR RECORDER'S OFFICE BOX NO. _____

Chicago Title & Trust Co.
Lake County Division

COURT REPORTER AGREEMENT

CHECK ONE OF THE FOLLOWING:

☑ I authorize the County to act on my behalf to retain a Certified Shorthand Reporter to transcribe the public hearing and provide a transcript to the Zoning Board of Appeals. I further agree to pay the Reporter reasonable fees for his/her services. If I do not pay the Reporter and the County is invoiced and pays the Reporter, I agree to reimburse the County. If the County sues to obtain reimbursement, I agree to pay the County its reasonable attorney's fees in bringing suit and obtaining a judgment.

☐ I will furnish a Certified Shorthand Reporter to transcribe the public hearing and provide a transcript to the Zoning Board of Appeals. I realize that the failure to do so may result in the continuation of the public hearing in which case I agree to reimburse the County for all additional expenses caused by such continuation.

Signature

THIS SIGNED AGREEMENT MUST ACCOMPANY YOUR APPLICATION

DIM	100	125	150
A (COB)	1671 [65.8]	1661 [65.4]	1661 [65.4]
B	308 [12.1]	682 [26.8]	307 [12]
C	1810 [71.3]	1810 [71.3]	2060 [81.1]
D	1784 [70.3]	1724 [67.9]	1696 [66.8]
E	389 [15.3]	443 [17.4]	442 [17.4]
F	571 [22.5]	534 [21.0]	530 [20.9]

MODEL	ALTERNATOR	GENSET WGT (WET) W/ ENCL			ENCLOSURE ONLY	
			KG	LBS	KG	LBS
100	4R9X/4T9X	STEEL WEATHER	1523	3358	374	825
		STEEL SOUND	1527	3367	395	870
		ALUM SOUND	1375	3032	227	500
	4R12X	STEEL WEATHER	1591	3508	374	825
		STEEL SOUND	1610	3549	395	870
		ALUM SOUND	1444	3183	227	500
125	4R12X	STEEL WEATHER	1703	3754	374	825
		STEEL SOUND	1722	3796	395	870
		ALUM SOUND	1556	3430	227	500
	4R13X/4T13X	STEEL WEATHER	1739	3834	374	825
		STEEL SOUND	1758	3876	395	870
		ALUM SOUND	1592	3509	227	500

MODEL	ALTERNATOR	GENSET WGT (WET) W/ ENCL			ENCLOSURE ONLY	
			KG	LBS	KG	LBS
150	4R13X	STEEL WEATHER	1743	3842	374	825
		STEEL SOUND	1766	3893	395	870
		ALUM SOUND	1593	3517	227	500
	4S12X	STEEL WEATHER	1864	4110	374	825
		STEEL SOUND	1885	4155	395	870
		ALUM SOUND	1717	3785	227	500
	4S13X	STEEL WEATHER	1877	4138	374	825
		STEEL SOUND	1897	4183	395	870
		ALUM SOUND	1730	3813	227	500
	4T13X	STEEL WEATHER	1778	3919	374	825
		STEEL SOUND	1798	3964	395	870
		ALUM SOUND	1630	3594	227	500

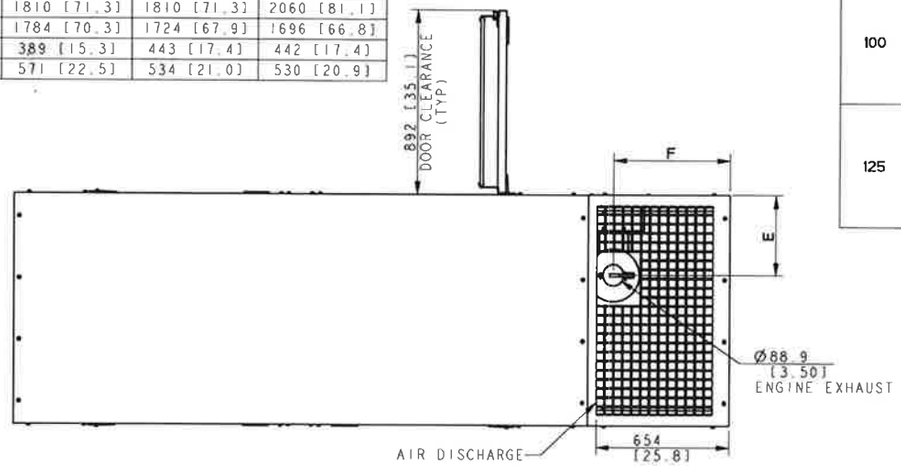

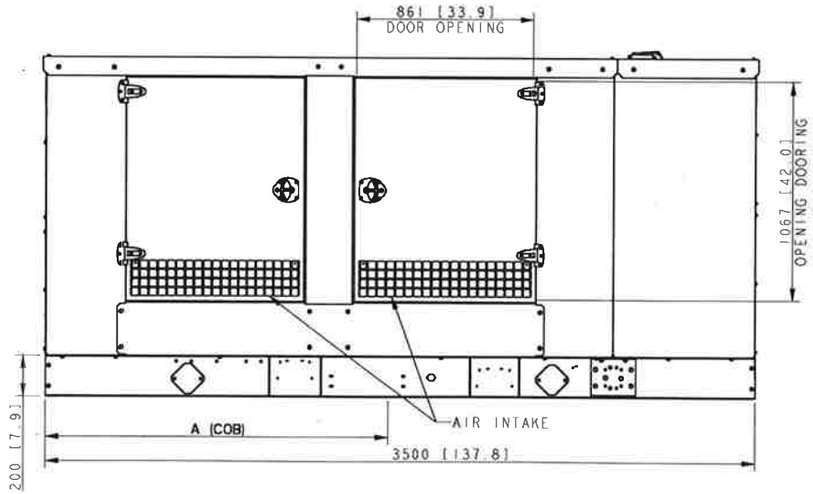

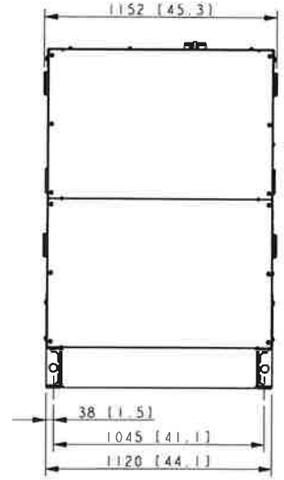

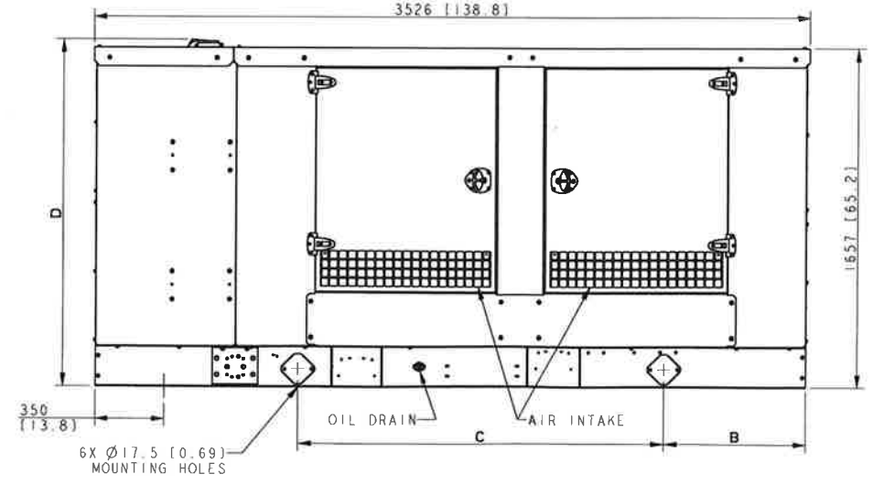

DIMENDIONS IN [] ARE IN ENGLISH EQUIVALENTS.

100 MODEL 4R9X/4T9X/4R12X
125 MODEL 4R12X/4R13X/4T13X
150 MODEL 4S12X/4R13X/4S13X/4T13X
RECONNECTABLE
IMPROVED MOTOR STARTING (IMS) RECONNECTABLE
& 600V ALTERNATORS
8.8L GM

REV	DATE	ON COMPOSITE DWGS. SEE PART NO. FOR REVISION LEVEL	BY
-	10-28-11	NEW DRAWING [92230-2]	KRH
A	3-15-16	(D-7) FOR MODEL 150, DIM E 442[17.4] WAS 2060[81.1] [CT141193]	PRM
B	4-14-16	DECALS & STRIPS ARE REMOVED; (D-7,8) MODEL 125: DIM B 682[26.8] WAS 308[12.1], MODEL 150: DIM B 307[12.0] WAS 433[17.0] [CT143165]	PRM
C	2-14-17	(D-7) DIM E: 443 [17.4] WAS 389 [15.3] [CT170844]	MVT
D	9-27-17	(C-5) DIM. Ø88.9 [3.50] ADDED [CT177004]	SRM

UNLESS OTHERWISE SPECIFIED:
1) DIMENSIONS ARE IN MILLIMETERS
2) TOLERANCES ARE
X.XX ±
X.X ±
X ±
ANGLES ±
SURFACE FINISH MAX.
THIRD ANGLE PROJECTION

APPROVALS		DATE
DRAWN	KRH	10-28-11
CHECKED	KRH	10-28-11
APPROVED	JAS	10-28-11

KOHLER CO. METRIC | PRO-E

POWER SYSTEMS, KOHLER, WI 53044 U.S.A.

THIS DRAWING IN DESIGN AND DETAIL IS KOHLER CO. PROPERTY AND MUST NOT BE USED EXCEPT IN CONNECTION WITH KOHLER CO. WORK. ALL RIGHTS OF DESIGN OR INVENTION ARE RESERVED.

TITLE: DIMENSION PRINT, 100-150KW GM ENCLOSURES

SCALE 0.08 | CAD NO | SHEET 1 of 1

DWG NO: ADV-8459 | D

FAIRVIEW LANE

LINCOLN DRIVE

EX. GARAGE
G.F.=770.42

#459

EX. TIMBER WALL

EX. ASPHALT DRIVEWAY

EX. WOOD DECK

#37097
EX. RESIDENCE
T.F.=769.49

EX. WOOD FENCE

149.94'

S 54°09'21" W

6' HIGH CONSTRUCTION CHAIN LINK FENCE (TYP.)

SILT PROTECTION FENCE (TYP.)

763.91-12"S

EX. ASPHALT DRIVEWAY

E12"CMP

N 35°30'39" W
25.00'

764.72-12"N

NEW ALUMINUM DOWNSPOUT WITH CONCRETE SPLASH BLOCK

L.S.A.

PROP. 1-1/2" GAS LINE TO GENERATOR.

#25346
EX. PUMP HOUSE
F.F.=770.75

NEW 4" PVC SANITARY DRAIN LINE.

PROP. ELEC. ATS/GENERATOR.

CORE EXISTING MANHOLE.

NEW 10" D.I.P. JAWA FEED LINE.

CONNECT TO EXISTING WATERMAIN.

767.95-RIM
750.90-10"NE
750.69-10"NW
750.69-10"SE

EX. ASPHALT PAVEMENT

JOB BENCHMARK:
EAST HEADBOLT ON HYDRANT
ELEVATION=768.90 NAVD88

NEW GENERATOR ON CONCRETE PAD (PHASE 1)

22.5'

SILL= 770.76

6.00'

10' MAX.

769.32-RIM
751.07-10"N
751.06-10"SW
765.00-4"NE

ANTENNAE POLE

"GROUND" BOX 1'X1'

EX. ASPHALT DRIVEWAY

EX. METAL CABINET

CONST. GATE

EX. STANDPIPES

CONST. GATE

765.26-12"W

EX. GRAVEL DRIVEWAY

E12"CMP

EX. ASPHALT DRIVEWAY

NEW 5" THICK CONCRETE SERVICE WALK

768.18-12"E

769.08-12"W

EX. ASPHALT PAVEMENT

TREE ROOT BRIDGING PROTECTION, 8" OF WOOD CHIPS OVER SHEETS OF 3/4" EXTERIOR PLYWOOD COVERING THE CRITICAL ROOT ZONE.

#458 #457 #456 #455 #454 #453 #452 #451 #450 #449 #448 #460

EX. SHED

EX. WOOD FENCE

T.F.=776.50

SUMP

#25334
EX. RESIDENCE
T.F.=769.49

T.F.=775.01

G.F.=774.82

EX. ASPHALT DRIVEWAY

770.68-12"E

36" 18" 10" 10" 7" 7" 2" 2" 17"

RESTORATION NOTES:

6" TOPSOIL IMPORT & RESPREAD. TEMPORARILY SEED AND BLANKET DISTURBED AREAS. (PHASE 1)

PERMANENT SEED AND BLANKET OF DISTURBED AREAS. (PHASE 2)

LEGEND

EXISTING		PROPOSED
104	CONTOUR	102
× 105.08	SPOT ELEVATION	× 104.08
10"	DECIDUOUS TREE W/DIA.	
12"	CONIFEROUS TREE W/DIA.	
	SANITARY MANHOLE	
	STORM MANHOLE	
	CATCH BASIN	
	INLET	
	WATER SERVICE BOX	
	VALVE & VAULT	
	FIRE HYDRANT	
	UTILITY POLE	
	LIGHT STANDARD	
	STORM CULVERT	
E8"SA	SANITARY SEWER	
E12"SD	STORM SEWER	
E8"W	WATER MAIN	8"W
	DITCH	
	SWALE	
	DIRECTION SURFACE DRAINAGE	
	SUMMIT	
	DOWNSPOUT	
	SILT PROTECTION FENCE	F F F
	CHAIN LINK FENCE	C C C

P.W. #2014.097
LINCOLN WELL HOUSE

0 10 20 30 40
SCALE IN FEET

SOLE PROPERTY OF GREENGARD, INC. AND NO REPRODUCTION OR USE, IN WHOLE OR PART WITHOUT WRITTEN PERMISSION OF GREENGARD, INC.

DRAWN BY:	DATE:	REVISIONS	DRAWN BY:	DATE:	REVISIONS

DESIGNED BY: DMW	DATE: 2-02-18
CHECKED BY: DRF	DATE: 2-02-18
APPROVED BY: DMW	DATE: 2-02-18

GREENGARD, INC.
Engineers • Surveyors • Planners
111 Barclay Blvd., Suite 310, Lincolnshire, Illinois 60069-3623
PHONE: 847-634-3883
FAX: 847-634-0587
E-MAIL: 2310@GREENGARDINC.COM
ILL. REGISTRATION NO. 184-000895

SCALE:	1"=10'
DRAWING No.	61034
SHEET	C5

25346 LINCOLN DRIVE – FOX LAKE HILLS

SITE IMPROVEMENT PLAN